ZZZ 210U

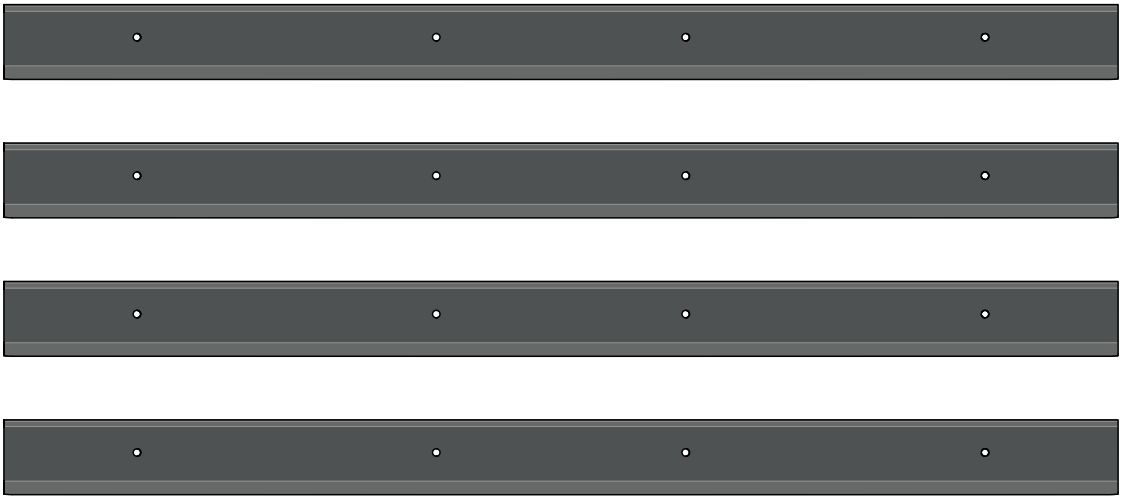

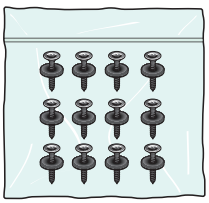

VELUX®

VAS 454682-2026-10

1

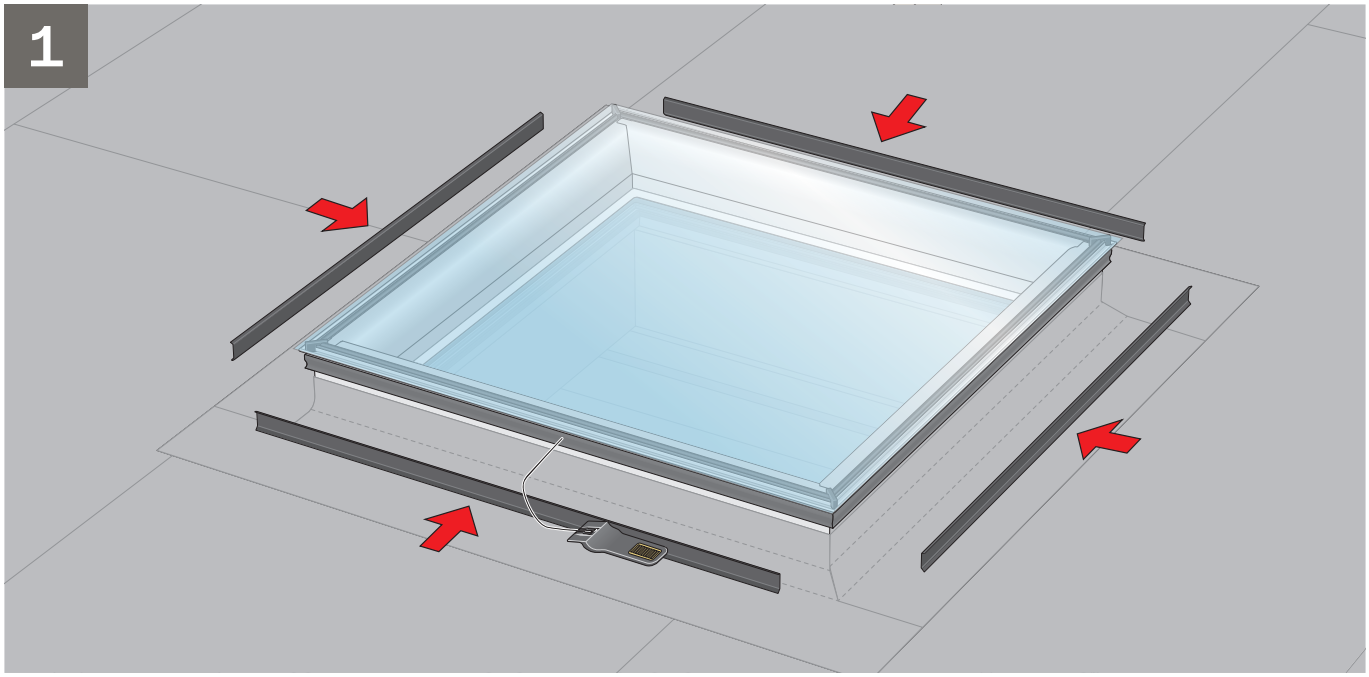

2

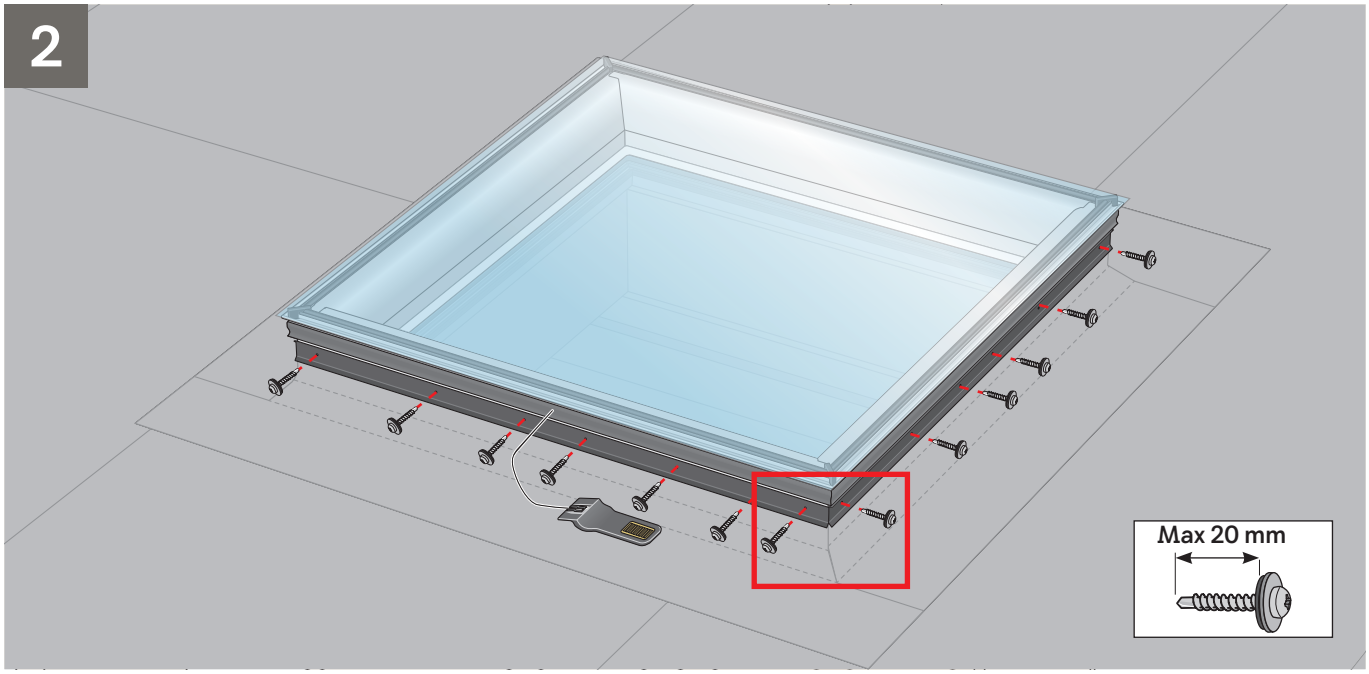

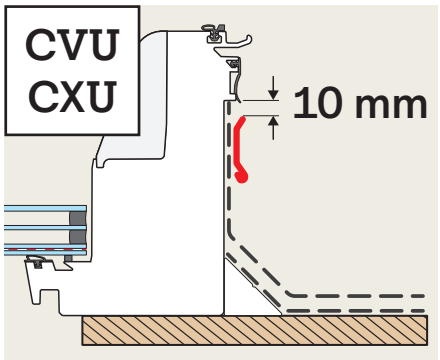

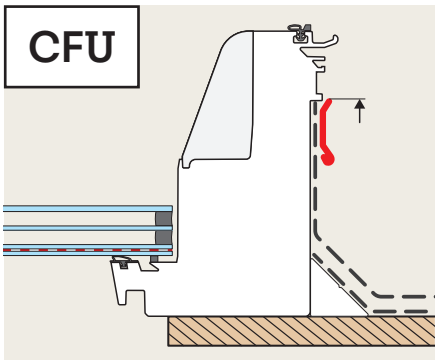

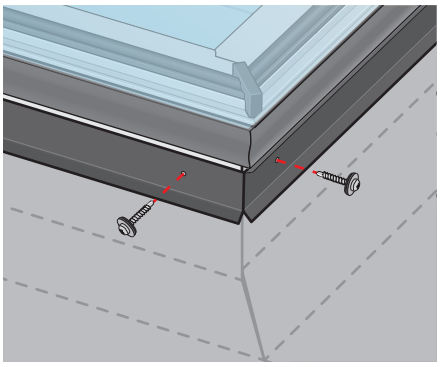

www.velux.com

velux.com/contact

INSTALLATION INSTRUCTIONS FOR ZZZ 210U ©2020, 2026 VELUX GROUP ®VELUX AND THE VELUX LOGO ARE REGISTERED TRADEMARKS USED UNDER LICENCE BY THE VELUX GROUP